REVISIONS			
LTR	DESCRIPTION	DATE	APPROVED
A	Editorial changes and corrections throughout. Revised 3.2, 3.2.2, table I, and table III to agree with source specification.	21 May 2013	Michael A. Radecki

CURRENT DESIGN ACTIVITY CAGE CODE 037Z3
HAS CHANGED NAMES TO:
DLA LAND AND MARITIME
COLUMBUS, OHIO 43218-3990

Prepared in accordance with ASME Y14.100

REV STATUS OF PAGES	REV	A	A	A	A	A	A	A										
	PAGES	1	2	3	4	5	6	7										

PMIC N/A	PREPARED BY Ken Bernier	DEFENSE SUPPLY CENTER, COLUMBUS COLUMBUS, OH
Original date of drawing 8 April 2005	CHECKED BY Ken Bernier APPROVED BY Kendall Cottongim	TITLE CAPACITORS, TANTALUM, HYBRID, HERMETICALLY SEALED
	SIZE A / CODE IDENT. NO. 037Z3	DWG NO. 04006
	REV A	PAGE 1 OF 7

1. SCOPE

1.1 Scope. This drawing describes the requirements for shock hardened tantalum hybrid capacitors, hermetically sealed in welded tantalum case with glass to metal anode terminal.

1.2 General. The capacitor shall utilize a sintered tantalum anode and ruthenium oxide coated cathodes operating in aqueous electrolyte.

1.3 Part or Identifying Number (PIN). The complete PIN is as follows:

04006-	-XX
Drawing number	Dash number (see table I)

2. APPLICABLE DOCUMENTS

2.1 General. The documents listed in this section are specified in sections 3 and 4 of this drawing. This section does not include documents cited in other sections of this drawing or recommended for additional information or as examples. While every effort has been made to ensure the completeness of this list, document users are cautioned that they must meet all specified requirements of documents in sections 3 and 4 of this drawing, whether or not they are listed.

2.2 Government documents.

2.2.1 Specifications, standards, and handbooks. The following specifications, standards, and handbooks form a part of this document to the extent specified herein. Unless otherwise specified, the issues of these documents are those cited in the solicitation or contract (see 6.2).

DEPARTMENT OF DEFENSE STANDARDS

MIL-STD-202 - Test Methods for Electronic and Electrical Components Parts
MIL-STD-1285 - Marking of Electrical and Electronic Parts

(Copies of these documents are available online at http://quicksearch.dla.mil/ from the Standardization Document Order Desk, 700 Robbins Avenue, Building 4D, Philadelphia, PA 19111-5094.)

2.3 Non-Government publications. The following documents form a part of this document to the extent specified herein. Unless otherwise specified, the issues of the documents are those cited in the solicitation or contract.

ASSOCITATION CONNECTING ELECTRONIC INDUSTRIES (IPC)

J-STD-002 - Solderability Tests for Component Leads, Terminations, Lugs, Terminals and Wires

(Copies of these documents are available online at www.IPC.org or from IPC, 3000 Lakeside Drive, Suite 309 S, Bannockburn, IL 60015.)

2.4 Order of precedence. Unless otherwise noted herein or in the contract, in the event of a conflict between the text of this document and the references cited herein, the text of this document takes precedence. Nothing in this document, however, supersedes applicable laws and regulations unless a specific exemption has been obtained.

3. REQUIREMENTS

3.1 Interface and physical dimensions. The interface and physical dimensions shall be as specified herein (see figure 1).

3.1.1 Case. The case shall be tantalum.

3.1.2 Mass. 10 – 50 volt rated parts (see table I): 8 ± 3 grams.

3.1.3 Pure tin. The use of pure tin, as an underplate or final finish is prohibited both internally and externally. Tin content of capacitor components and solder shall not exceed 97 percent, by mass. Tin shall be alloyed with a minimum of 3 percent lead, by mass (see 6.3).

3.1.4 Storage temperature. The storage temperature shall be -62°C to +130°C.

3.1.5 Operating temperature range. The operating temperature range shall be -55°C to +125°C.

3.2 Electrical characteristics.

Note: These capacitors are designed for limited duration charge for high impact shock applications. Total time on charge shall not exceed 2 hours at +85°C.

3.2.1 Rated voltage. The rated voltage shall be in accordance with table I at -55°C to +85°C or (+125°C with voltage derating (see table I)).

3.2.2 Surge voltage. Surge voltage shall be at 110 percent of rated voltage at +85°C for a 1 minute maximum duration. The part shall be charged and discharged through a 1,000 ohm resistor. The capacitor shall not be visibly damaged and the electrical characteristics shall remain within specification.

3.2.3 Dielectric. The dielectric shall be an aqueous electrolyte.

3.2.4 DC leakage current. The maximum DC leakage current shall be as specified in table I following 5 minutes at the working voltage and at +23°C ±2°C.

3.2.5 Capacitance. Capacitance shall be as specified in table I at 120 Hz and +23°C ±2°C.

3.2.6 Capacitance tolerance. The capacitance tolerance shall be ±20 percent at +23°C ±2°C.

3.2.7 Equivalent series resistance (ESR). The maximum equivalent series resistance shall be as specified in table I at 1 kHz and +23°C ±2°C.

TABLE I. Electrical characteristics.

DSCC drawing 04006-	Capacitance in (uF)	+85°C rated voltage dc	+125°C rated Voltage dc	Surge voltage dc	ESR max (ohms)	Leakage current max (μA)
01	10,000	10	6	11	0.20	50
02	6,250	16	9.5	17.6	0.20	50
03	4,400	25	15	27.5	0.20	50
04	2,900	35	21	38.5	0.25	50
05	1,600	50	30	55	0.25	50

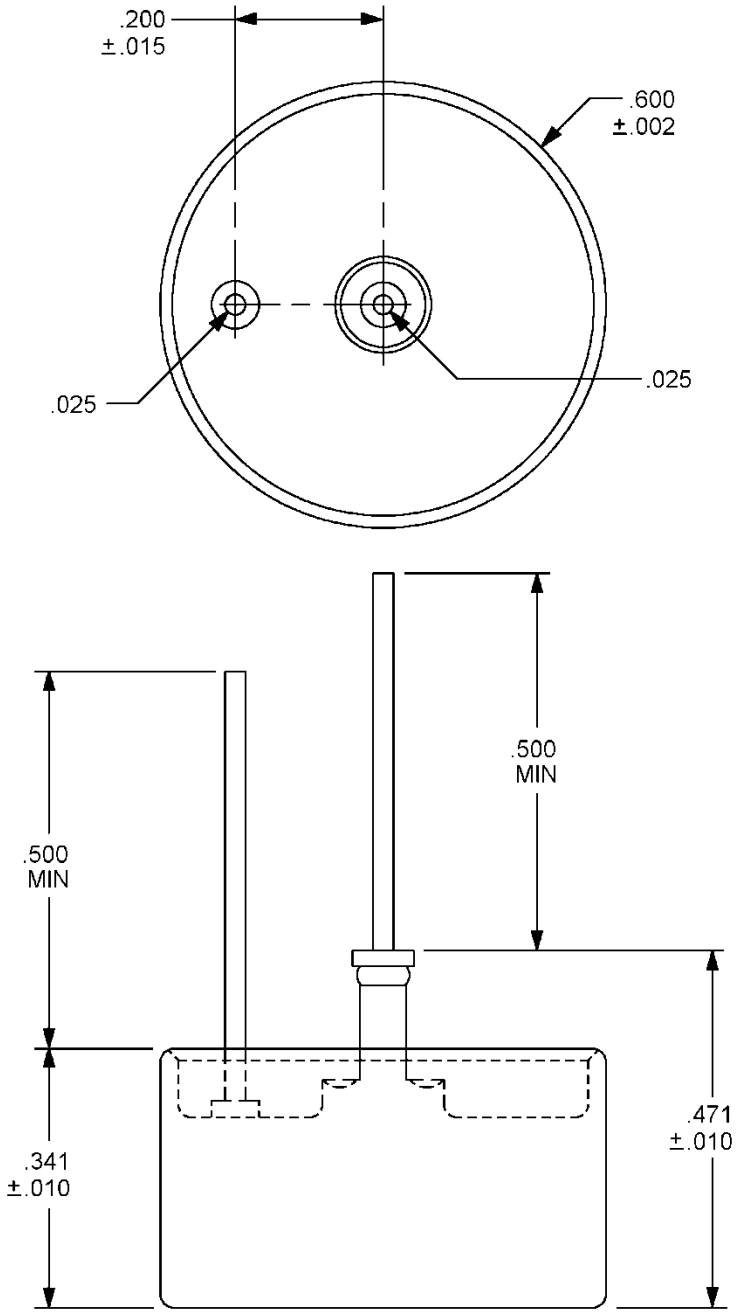

Inches	mm
.002	0.05
.010	0.25
.015	0.38
.025	0.64
.200	5.08
.341	8.66
.471	11.96
.500	12.70
.600	15.24

NOTES:
1. Dimensions are in inches.
2. Metric equivalents are given for general information only.

FIGURE 1. Case dimensions and configuration.

3.3 Environmental testing.

TABLE II. Environmental testing.

Test	Test method	Condition	Details
Shock	MIL-STD-202, method 213	E	0.5 ms at 1000g
Vibration	MIL-STD-202, method 204	E	12 sweeps/axis, 50g peak
Vibration	MIL-STD-202, method 214	I, letter H	1.5 hours/axis, 29.28g rms
Moisture resistance	MIL-STD-202, method 106		6 V polarity
Thermal shock	MIL-STD-202, method 107	A	
Altitude	MIL-STD-202, method 105	D	100,000 ft test

3.3.1 Thermal shock. Thermal shock test shall be as specified in table II.

3.3.2 Moisture resistance. Moisture resistance test shall be as specified in table II.

3.3.3 Hermetic Seal. The capacitor shall be hermetically sealed such that the case does not leak electrolyte or vent any gas when exposed to a vacuum, in accordance with MIL-STD-202, method 112, test condition C, procedure IIIa.

3.4 Physical testing.

3.4.1 Shock . Shock test shall be as specified in table II.

Note: These "shock-hardened" capacitors are designed for high impact and penetrating weapon environments. Testing has confirmed survivability at impacts over 10,000g.

3.4.2 Resistance to solder heat. The capacitor shall withstand solder dipping of the terminals at +260°C for 10 seconds in accordance with MIL-STD-202, method 210, test condition B. The capacitor shall not be visibly damaged and the electrical characteristics shall not be affected.

3.4.3 Terminal strength. The capacitor terminals shall withstand a 5-pound pull test for 30 seconds in accordance with MIL-STD-202, method 211, test condition A. The capacitor shall not be visibly damaged and the electrical characteristics shall not be affected.

3.4.4 Solderability. The terminations shall be solderable in accordance with J-STD-002.

3.4.5 Resistance to solvents. Resistance to solvents shall be in as specified in MIL-STD-202, method 215.

3.5 Recycled, recovered, or environmentally preferable materials. Recycled, recovered, or environmentally preferable materials should be used to the maximum extent possible provided that the material meets or exceeds the operational and maintenance requirements, and promotes economically advantageous life cycle costs.

3.6 Manufacturer eligibility. To be eligible for listing as an approved source of supply a manufacturer shall perform all testing specified herein on a sample of parts agreed upon by the manufacturer and DLA Land and Maritime-VA.

3.7 Certificate of compliance. A certificate of compliance shall be required from manufacturers requesting to be an approved source of supply.

3.8 Marking. Marking shall be in accordance with MIL-STD-1285, except the capacitor shall be marked with the PIN as specified herein (see 1.2), the manufacturer's name or Commercial and Government Entity (CAGE) code, date lot code and polarity.

3.9 Workmanship. The capacitor shall be uniform in quality and free from any defects that will affect life, serviceability, or appearance.

4. VERIFICATION

4.1 Qualification inspection. Qualification inspection is not required.

4.2 Conformance inspections.

4.2.1 Inspection of product for delivery. Inspection of product for delivery shall consist of dc leakage, capacitance, and ESR before being shipped.

5. PACKAGING

5.1 Packaging. For acquisition purposes, the packaging requirements shall be as specified in the contract or order (see 6.2). When packaging of materiel is to be performed by DoD or in-house personnel, these personnel need to contact the responsible packaging activity to ascertain packaging requirements. Packaging requirements are maintained by the Inventory Control Point's packaging activities within the Military Service or Defense Agency, or within the military service's system commands. Packaging data retrieval is available from the managing Military Department's or Defense Agency's automated packaging files, CD-ROM products, or by contacting the responsible packaging activity.

6. NOTES

(This section contains information of a general or explanatory nature, which may be helpful, but is not mandatory.)

6.1 Intended use. Hybrid capacitors covered by this drawing are intended mainly for use in defense electronic systems, avionics, and weapon systems.

6.2 Ordering data. The contract or purchase order should specify the following:

a. Complete PIN (see 1.2).

b. Requirements for delivery of one copy of the conformance inspection data or certificate of compliance that parts have passed conformance inspection with each shipment of parts by the manufacturer.

c. Requirements for packaging and packing.

d. Requirements for notification of change of product to procuring activity, if applicable.

6.3 Tin whisker growth. The use of alloys with tin content greater than 97 percent, by mass, may exhibit tin whisker growth problems after manufacture. Tin whiskers may occur anytime from a day to years after manufacture and can develop under typical operating conditions, on products that use such materials. Conformal coatings applied over top of a whisker-prone surface will not prevent the formation of tin whiskers. Alloys of 3 percent lead, by mass, have shown to inhibit the growth of tin whiskers. For additional information on this matter, refer to ASTM-B545 (Standard Specification for Electrodeposited Coatings of Tin).

6.4 Replaceability. Capacitors covered by this drawing will replace the same commercial device covered by contractor prepared specification or drawing.

6.5 Changes from previous issue. The margins of this specification are marked with vertical lines to indicate where changes from the previous issue were made. This was done as a convenience only and the Government assumes no liability whatsoever for any inaccuracies in these notations. Bidders and contractors are cautioned to evaluate the requirements of this document based on the entire content irrespective of the marginal notations and relationship to the last previous issue.

6.6 Users of record. Coordination of this document for future revisions is coordinated only with the approved source(s) of supply and the users of record of this document. Requests to be added as a recorded user of this drawing may be achieved online at capacitorfilter@dla.mil or if in writing to: DLA Land and Maritime, ATTN: VAT, Post Office Box 3990, Columbus, OH 43218-3990 or by telephone (614) 692-4709 or DSN 850-4709.

6.7 Approved source(s) of supply. Approved source(s) of supply are listed herein. Additional sources will be added as they become available. Assistance in the use of this drawing may be obtained online at capacitorfilter@dla.mil or by contacting DLA Land and Maritime, ATTN: VAT, Post Office Box 3990, Columbus, OH 43218-3990 or by telephone (614) 692-4709 or DSN 850-4709.

TABLE III. Similar vendor PIN.

DSCC PIN 04006- 1/	Similar vendor PIN
01	THQS2010103
02	THQS2016622
03	THQS2025442
04	THQS2035292
05	THQS2050162

1/ Parts must be purchased to this DSCC PIN to assure all performance and tests are met.

Vendor CAGE	Vendor name and address
06MN5	Evans Capacitor Company 72 Boyd Avenue East Providence, RI 02914-1202